RE97Tx
Micro-Headworn Condenser Microphone with TA4F Connector

Key Features:

- Ultra-Low Profile for Inconspicuous Use
- Lightweight, Durable
- Interchangable for Left or Right Ear
- Omnidirectional Polar Pattern to Provide Clean Sound and Uniform Response

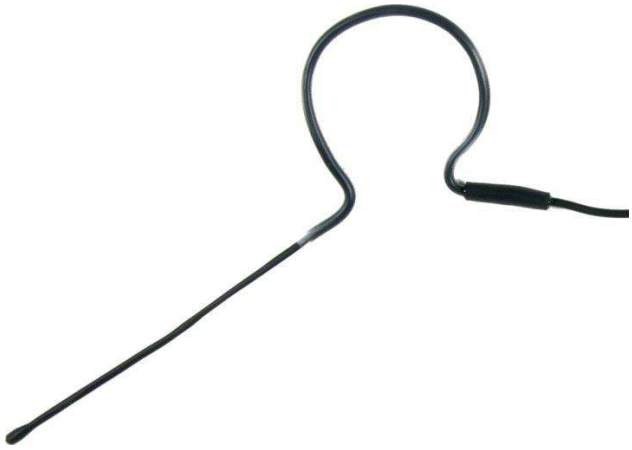

General Description:

The Electro-Voice® RE97Tx is an Ultra-low profile, omnidirectional, back-electret condensor headworn microphone designed for use with standard EV and Telex belt packs. The RE97Tx is intended for spoken word use such as Houses of Worship, Corporate AV, Theatre, Fixed Install, and other venues where a full-range, natural, well-balanced sound is required. The omnidirectional polar pattern of the RE97Tx provides a clean and accurate sonic quality and uniform output regardless of the microphone's position relative to the sound source.

The RE97Tx is designed to be extremely flexible and easily formed to fit over the ear of any user. The malleable boom and earhook can be shaped to match virtually any contour. The TA4F terminated cable is discretely routed behind the user and attaches to the shirt collar with the elegant clothing clip included, keeping the cable out of the way and preventing the microphone from being pulled off the user's ear. The supplied windscreen can be used in windy environments and to reduce breath noise.

The RE97Tx comes with a shielded 4ft cable terminated in a high quality TA4F connector. It is wired for use with standard EV and Telex belt packs including the EV (BPU-2/CSB-1000) and Telex (WT-500/WT-1000) bodypack transmitters and operates from a 5VDC supply.

Technical Specifications:

Generating Element:	Condenser, Back-Electret
Frequency Response:	50 Hz - 15 kHz
Polar Pattern:	Omnidirectional
Sensitivity, 1 kHz (Open Circuit):	4.0 mV/Pascal
Clipping Level:	>125 dB SPL
Equivalent Noise:	32 dBA
Dynamic Range:	93 dB
Output Impedance, 1 kHz:	3000 Ohms
Power Requirements:	+5 VDC
Current Consumption:	310 µA
Polarity:	Positive Pressure on Diaphragm Produces a Positive Voltage on Pin 2
Dimensions:	Boom Length (as shipped): 3.4 in. (86.4mm) Boom Diameter: 0.080 in. (2.00mm) Capsule Diameter: 0.120 in. (3.05mm) Earhook Diameter: 0.090 in. (2.30mm)
Cable:	4 ft (1.22m) Long 0.077 in (1.95mm) Diameter
Connector Wiring:	Pin 1 - Ground, Shield Pin 2 - Audio Pin 3 - Bias Voltage Pin 4 - N/C
Accessories Furnished:	Windscreen Clothing Clip Gig Bag
Colors Available:	Beige, Brown, Black
Net Weight:	0.6 oz. (17g) Mic Only - 0.2 oz. (5.7g)

Interfacing RE97Tx:

Your RE97Tx is configured for use with standard Electro-Voice and Telex bodypack transmitters. Modifications to RE97Tx should be performed by a qualified technician only. Using the microphone in a way other than described in this manual may damage the microphone and void your warranty.

The following table is provided for your reference should you desire to utilize the RE97Tx with another manufacturer's wireless transmitter bodypack. Please verify the specifications of your transmitter before attempting any changes to your microphone.

Manufacturer	Wireless Systems	Connector Type	Suggested Wiring
AKG	WMS 40 Pro, WMS 400, and WMS4000 (Transmitters PT 40, PT400, and PT4000)	TA3F	Pin 1: Shield
			Pin 2: Wire
			Jump Pin 2 to Pin 3
Audio-Technica	AT UniPak-type Transmitters ATW-1127, ATW-1235, ATW-1451, ATW-2110, ATW-3110a, AEW-T1000, ATW-201, ATW-601, ESW-T210, and ESW-T211 for the following systems: 1100, 1200, 1400, 2000, 3000, 4000, and 5000 Series Professional; 200 and 600 Series Freeway; NOT for use with U100 System	Hirose 4-Pin HR10A-7P-4S	Pin 1: Shield
			Jump Pin 1 to Pin 2
			Pin 3: Wire
			Shunt Pins 3-4 with R = 5k Ohms
Electro-Voice	RE-2 (BPU-2); RE-1 (CSB-1000); R100 (BPV)	TA4F	Pin 1: Shield
			Pin 2: Wire
			Shunt Pins 2-3 with R = 10k Ohms
			Pin 4: Not Connected
Sennheiser	Evolution Wireless Systems 100, 300, 500 (Transmitters SK100, SK300, SK500), and G2 Series	3.5mm (1/8") Stereo or Mono Mini-Plug	Tip: Wire
			Sleeve: Shield
			Ring: Not Connected
			5V Zener diode: + to tip, - to sleeve (1N5231 or similar)
Shure	Performance Gear (UT1); PGX1; SLX1; T Series (T1, T11); UC1; UHF (U1); UHF-R (UR1); ULX Professional and ULX Standard (ULX1)	TA4F	Pin 1: Shield
			Shunt Pins 2-3 with R = 10k Ohms
			Pin 3: Wire
			Pin 4: Not Connected
Telex	FMR Series 70, 500, 1000 (Transmitters WT-55, WT-500, WT-1000); SAFE 1000 (SAFE WT)	TA4F	Pin 1: Shield
			Pin 2: Wire
			Shunt Pins 2-3 with R = 10k Ohms
			Pin 4: Not Connected

Application Notes:

Figure 1 shows the ideal position of the microphone in use. The end of the boom should be located approximately ½" (13mm) back from the corner of the mouth and as close to the face as possible. This position will optimize the signal to noise ratio and minimize the acoustic effects of breath noise.

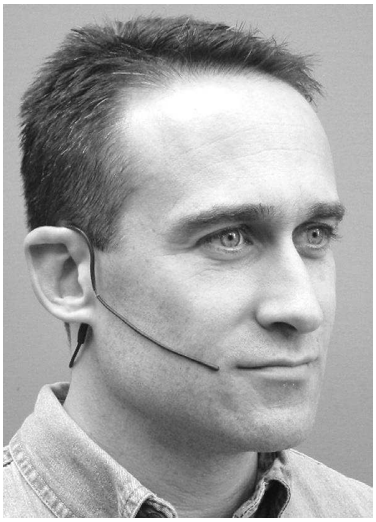

Figure 1

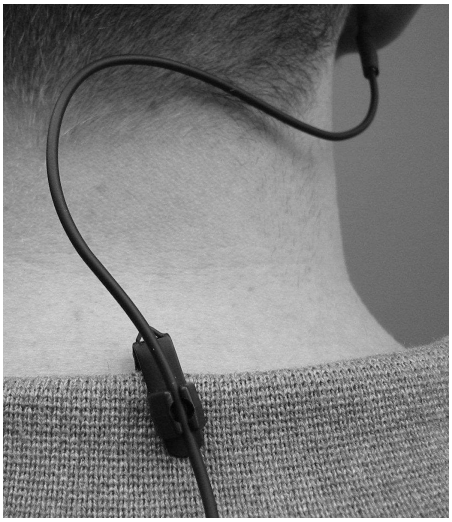

Figure 2

The microphone cable is routed behind the neck of the user and secured in place with the supplied clothing clip as shown in Figure 2. Allow some slack in the cable to enable the user's head complete range of motion in both directions without pulling the cable from the clothing clip.

Fitting:

1. **Shape the boom:** Figure 3 shows the microphone boom as received. Before placing the microphone over the user's ear, apply a slight bend to the boom, starting at the middle of the earhook, to aid the microphone boom in forming to the user's face.

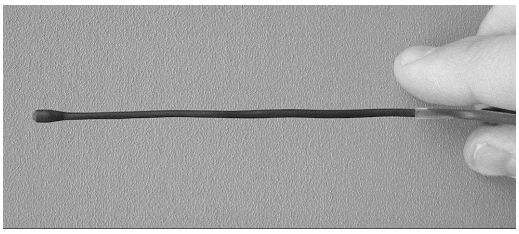

Figure 3

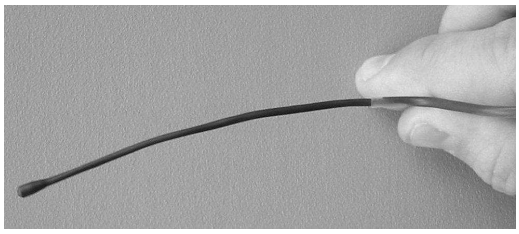

Figure 4

The boom can be easily straighten by pinching between the thumb and forefinger, and applying pressure as your fingers slide away from the earhook. The boom can be reshaped countless times without ill effect on the performance of the microphone or degradation of the mechanical structure.

2. **Fit to ear:** Place the microphone over the ear. Press on the earhook from all sides to form it to the contour of the ear. The shape of the earhook, as shipped, is designed to comfortably fit many users without adjustment. To make the fit to the ear more secure, press on the top and bottom of the earhook using thumb and forefinger.

3. **Adjust boom length:**
If the microphone is positioned too close or too far away from the corner of the mouth (See Figure 1 for ideal position), the boom length can be easily changed by reshaping the bend at the earhook. Figure 5 shows the microphone as received. To bring the microphone closer to the mouth (i.e. lengthen the boom), simply straighten out the bend at the earhook (Figure 6), and reapply the bend further up the earhook (Figure 7). To move the microphone further away from the mouth (i.e. shorten the boom), follow the same procedure, but reapply the bend further down the length of the boom. Changing the length of the boom will likely require re-shaping of the microphone to the ear for optimum comfort.

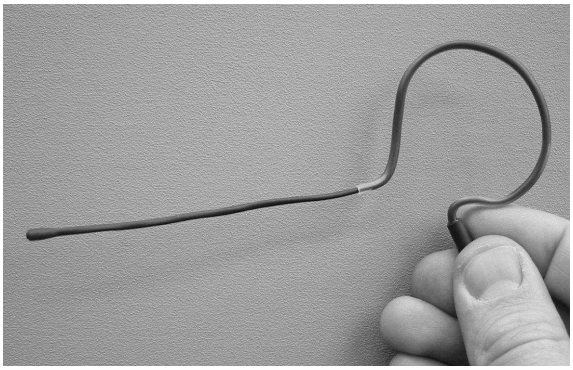

Figure 5

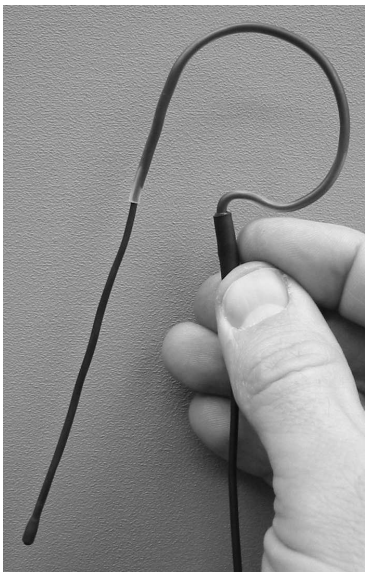

Figure 6

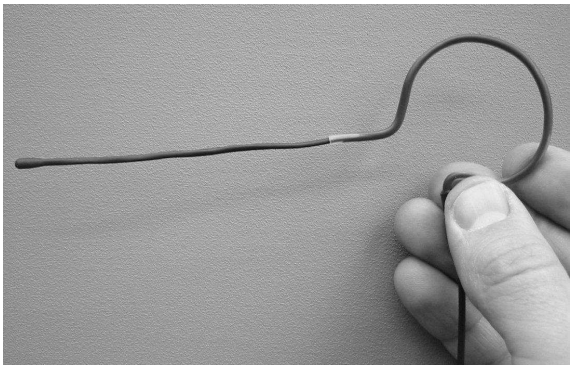

Figure 7

Frequency Response:

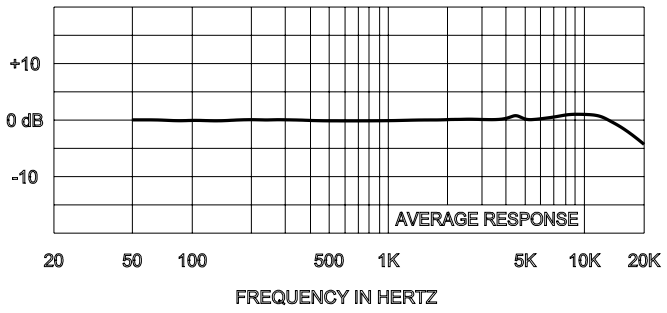

Polar Response:

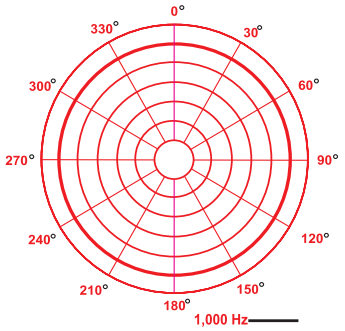

Windscreen Assembly:

Windscreen is supplied with the molded plastic adaptor already installed.

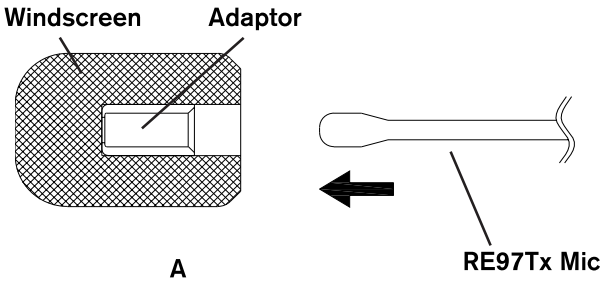

Hold windscreen on the sides at the "A" locations. Firmly press microphone into adaptor until it stops.

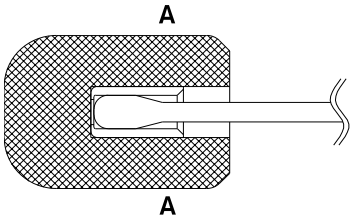

Product Dimensions:

Dimensions are in inches. Bracketed dimensions are millimeters.

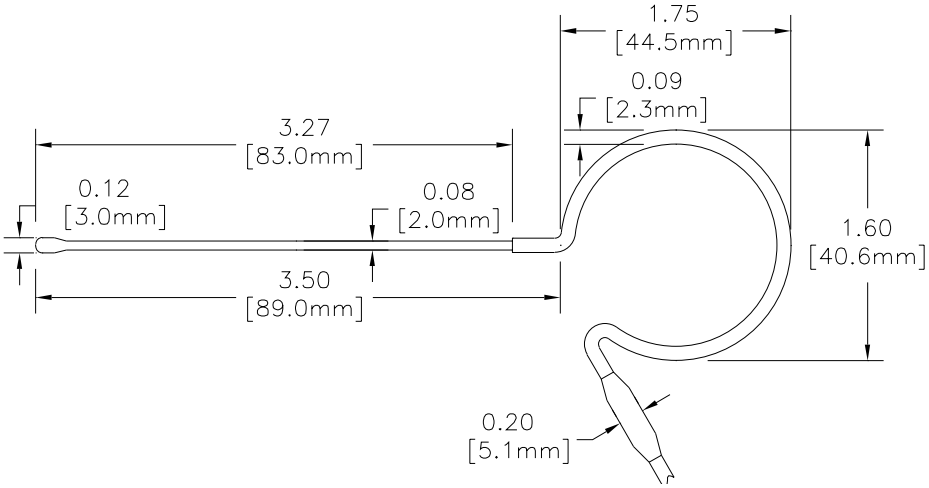

RE97Tx Part Numbers

- 301799000 RE97Tx Headworn Microphone, Beige Finish
- 301800000 RE97Tx Headworn Microphone, Brown Finish
- 301816000 RE97Tx Headworn Microphone, Black Finish

Electro-Voice®

12000 Portland Avenue South, Burnsville, MN 55337
Phone: 952/884-4051, Fax: 952/884-0043

www.electrovoice.com

© Bosch Communications Systems 05/2010

Part Number LIT000252 Rev C

U.S.A. and Canada only. For customer orders, contact Customer Service at:
800/392-3497 Fax: 800/955-6831
Europe, Africa, and Middle East only. For customer orders, contact Customer Service at:
+ 49 9421-706 0 Fax: + 49 9421-706 265
Other Internatonal locations. For customer orders, Contact Customer Service at:
+ 1 952 884-4051 Fax: + 1 952 887-9212
For warranty repair or service information, contact the Service Repair department at:
800/685-2606
For technical assistance, contact Technical Support at: **866/78AUDIO**

Specifications subject to change without notice.